Masport®

BARBECUE RANGE

MB4000

Part Number		**552995**
Dimensions	**Width**	**1380 mm**
	Depth	**640 mm**
	Height	**1180 mm**

Market Introduced - Sept 2017

Issue A.2
ECN 12317
Oct 2017 PB

552995
MB4000

Masport

Issue A.2
ECN 12317
Oct 2017 PB

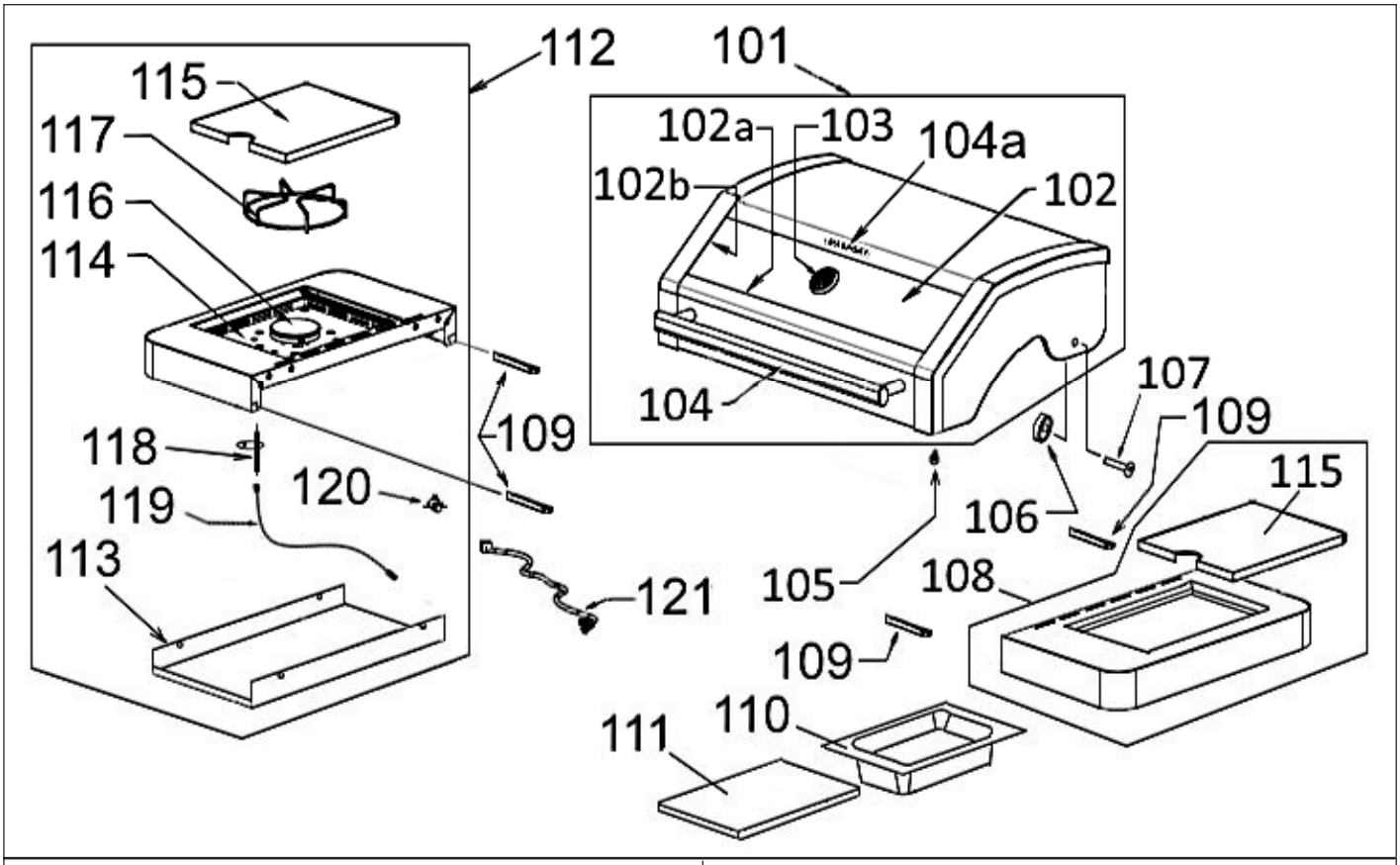

Item	Part	Description	Qty
101	**548143**	**Hood Assy, 4 Window Blk-Ali**	**1**
102	**548101**	*Glass- Window, Hood 674 x 146	**1**
102a	**549770**	*Seal-Window, 4bnr Horizontal	**1**
102b	**549772**	*Seal-Window, 4&6bnr Vertical	**1**
103	**548062**	*Gauge- Temp, Dia 61mm White	**1**
104	**548061**	*Handle- Hood, 4	**1**
104a	**548262**	*Badge, MASPORT (Small)	**1**
105	**548131**	Rubber Stopper, 12dia x 7.5mm	**2**
106/107	**548132**	Fasteners- Hood	**2**
108	**548681**	**Table- Side,RH Ice Box Blk**	**1**
115	**548115**	*Lid- Side Burner Blk	**1**
109	**548103**	Rod- Support, Side Shelf	**4**
110	**548683**	Box- Ice, 100mm S/S	**1**
111	**548685**	Board- Chopping	**1**
112	**548067**	**Table- Side, LH(S/Burner) Blk**	**1**
		(Also included is not illustrated 548105 Valve)	
113	**548055**	*Cover Panel-Bottom,S/Burner	**1**
114	**548119**	*Bowl- Spillage, Side Burner	**1**
115	**548115**	*Lid- Side Burner Blk	**1**
116	**548118**	*Burner-Side	**1**
117	**548117**	*Trivet- Side Burner	**1**
118	**548335**	*Electrode, S.Burner	**1**
119	**548176**	*Wire- Ignition, S.Burner 600mm	**1**
120	**548174**	*Jet, Side 0.91mm dia LPG	**1**
121	**548138**	Pipe- Flexi, Side Burner	**1**

NOT ILLUSTRATED

548100	Bolt Pack	M4-6000	**1**
548046	Owner's Manual- BBQ		**1**
548105	Valve- Side, LPG 0.91	Int Ign	**1**

When ordering PLEASE QUOTE PART NUMBER & Description, NOT Illustration No.
Determine right or left hand side from standing in operating position

552995
MB4000

Masport

Issue A.2
ECN 12317
Oct 2017 PB

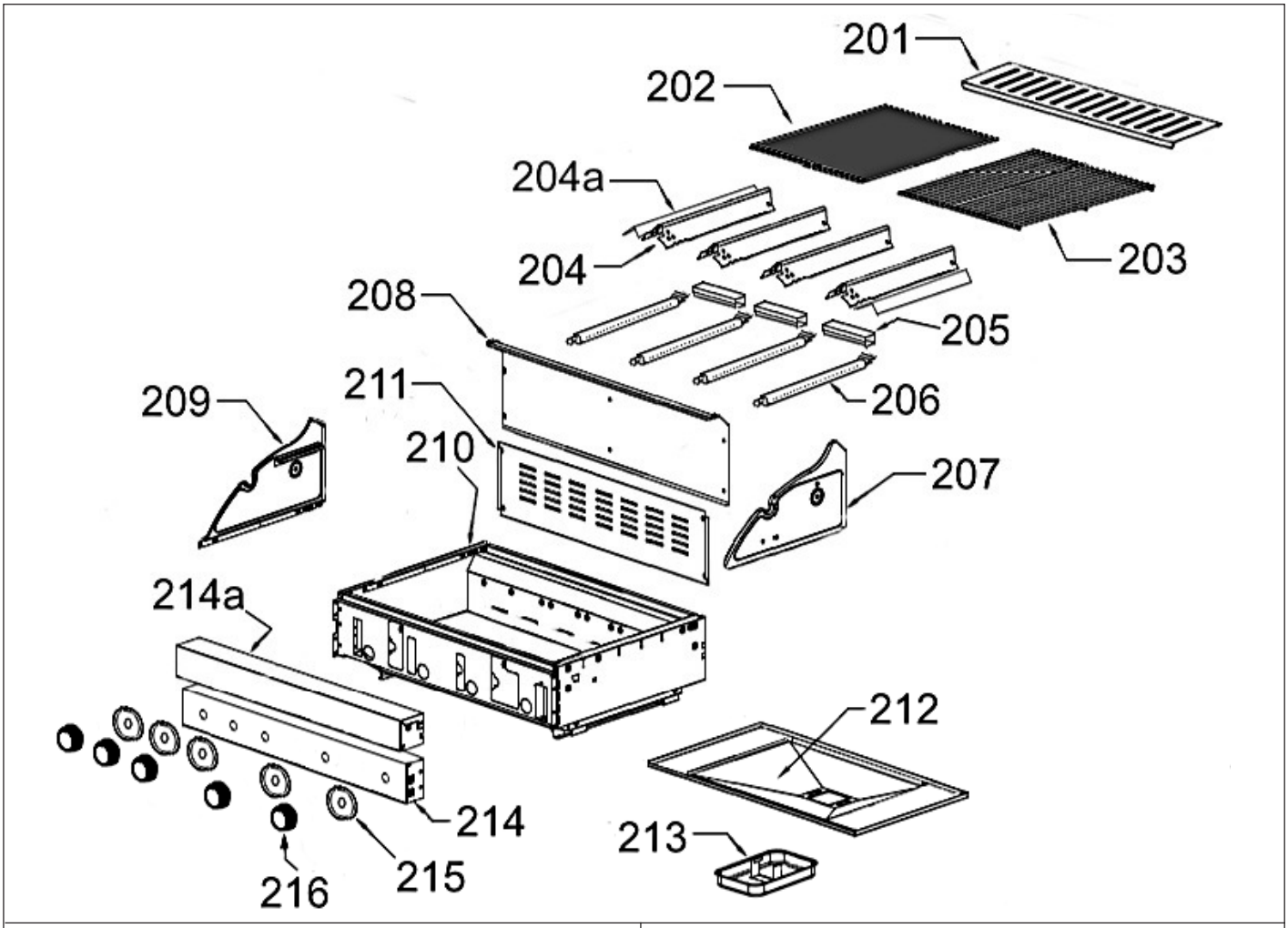

Item No	Part No	Description	Qty
201	548064	Rack- Warming 670mm MB4000	1
202	548120	Plate- P/E Matt 360x450	1
203	548123	Grill- P/E Matt 325x450	1
204	548065	Flame- Tamer, 80x390 (Solid) P/E	4
204a	548375	Flame- Tamer, 45x390 (Solid) P/E	2
205	548126	Cross Light S/S	3
206	548066	Burner- Tube,432mmx1.0 304S/S	4
207	548140	Panel- Side, RH Hood G/Body	1
208	548141	Panel- Rear, Hood G/Body	1
209	548139	Panel- Side, LH Hood G/Body	1
210	548124	Grill- Body, 4B P/E	1
211	548134	Panel- Rear, Heat Shield 4 Black	1
212	548073	Tray- Drip, 610x380	1
213	548074	*Cup- Grease, MB4-6000	1
214	548111	Dashboard,Lower 4B Black	1
214a	548562	Dashboard, Upper 4B S/S	1
215	548130	Bezel- Control Knob	5
216	548072	Knob- BBQ, 8.0 Blk	5

NOT ILLUSTRATED

548131	Rubber Stopper, 12diax7.5mm	2
549711	Clip- Burner	4
548056	**Manifold-Assy(Int Ign) 4 Brner)**	1
548059	*Jet, 4B Main 0.96mm dia LPG	4
548104	*Valve- Main, LPG 0.96 Int Ign	4
559332	Hose&Reg, POL 5/8" Elbow 700S	1

When ordering PLEASE QUOTE PART NUMBER & Description, NOT Illustration No.
Determine right or left hand side from standing in operating position

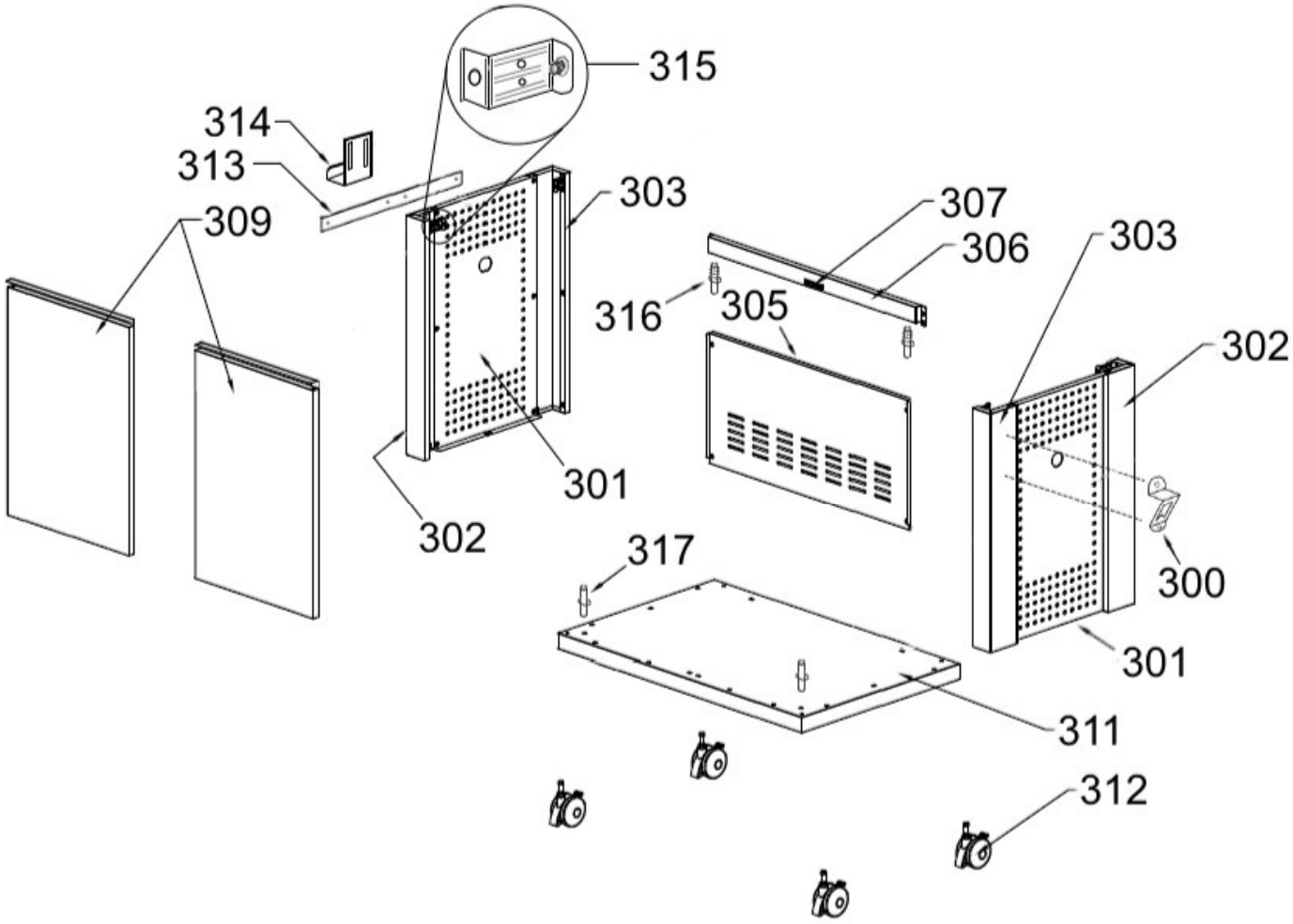

Item No	Part No	Description		Qty
300	548686	Bottle Opener		1
301	548083	Panel- Side, LH/RH Trolley	Blk	2
302	548281	Leg- L/Frnt-R/Rear	Blk	2
303	548282	Leg- R/Frnt-L/Rear	Blk	2
305	548091	Panel- Rear, Trolley	Blk	1
306	548086	Panel- Support, Front Trolley	Blk	1
307	548098	Magnet- Door, 45mm		1
309	548846	Door Assy RH/LH Blk/Alcoat 4		2
311	548564	Panel- Bottom, Trolley 4 (push)	Blk	1
312	548555	Castor- Locking, (Pushed On)		4
313	548147	Strap- Bracket, LPG		1

Item No	Part No	Description	Qty
314	548168	Bracket- Gas Cylinder	1
315	548178	Bracket- Trolley	4
316	548668	Hinge- Top, Door	2
317	548669	Hinge, Bottom, Door	2

Data Plate 548580.a.0

Name	Model	SAI Approval		Injector (mm)		Pressure (kPa)	Inp/Burn (Mj/h)	Total (Mj/h)
BBQ MASP MB4000	K104BEC3	SAI-400191	ULPG:	BBQ S/B	0.96 0.91	2.75	4 x 11.50 1 x 10.80	56.80
BBQ MASP MB4400	K104BHEC1	SAI-400191	ULPG:	BBQ S/B R/B	0.96 0.91 0.94	2.75	4 x 11.50 1 x 10.80 1 x 11.50	68.30
BBQ MASP MB6000	K106BHEC3	SAI-400191	ULPG:	BBQ S/B R/B	0.96 0.91 0.94	2.75	6 x 11.50 1 x 10.80 1 x 11.50	91.30
BBQ MASP MB6600	K106BHEC1	SAI-400191	ULPG:	BBQ S/B R/B	0.96 0.91 0.94	2.75	6 x 11.50 1 x 10.80 1 x 11.50	91.30
BBQ MASP CLASSIC 6 S/STEEL	K106BHEC3-SS	SAI-400191	ULPG:	BBQ S/B R/B	0.96 0.91 0.94	2.75	6 x 11.50 1 x 10.80 1 x 11.50	91.30
BBQ MASP MB6000 DARK SILVER	K106BEC3	SAI-400191	ULPG:	BBQ S/B	0.96 0.91	2.75	6 x 11.50 1 x 10.80	79.80

Gas Supply Pressure, ULPG
Min: 2.70kPa; Max: 3.45kPA

Gas Type: NZ: Universal LPG
AUS: ULPG

Complies to:
Standard AS 4557-2004 (AMDT2)

Minimum Clearance :
From Top of BBQ: 1500mm, From Sides: 700mm, From Rear : 700mm

Distributed by
MASPORT LIMITED

MASPORT LIMITED
1-37 Mt Wellington Highway, Panmure, Auckland 1060, New Zealand
PO Box 14349, Panmure Auckland 1471, New Zealand

MASPORT AUSTRALIA PTY LIMITED
1/40 Abbotts Road, Dandenong South, Melbourne, Victoria 3175, Australia
PO Box 533, Braeside, Victoria 3195, Australia

Read the instructions before using the appliance

USE OUTDOOR ONLY

WARNING: Parts of this appliance may be very hot, keep young children away

AUSTRALIA AND NEW ZEALAND
GAS SAFETY CERTIFICATION

Manufactured by:
Ningbo Agsun Products, Inc.

548580.A.0

For storage and cylinder exchange, disconnect hose at the cylinder only, do not disconnect hose from the appliance.

Optional Extras

548163	**Interchangeable Cooking System**		**Matt MB4**	**1**
548662	*Grill P/E Matt		295 x 450	**1**
548663	*Grill P/E Matt	I/Cook	395 x 450	**1**
548664	*Plate P/E Matt		Insert dia 305	**1**
548665	*Stone- Pizza		305	**1**
548127	**Cover- BBQ, Hooded**		**MB4000**	**1**
548292	**Rotisserie Set, 4B**		**850mm**	**1**

548292 ROTISSERIE SET - 4B 850mm

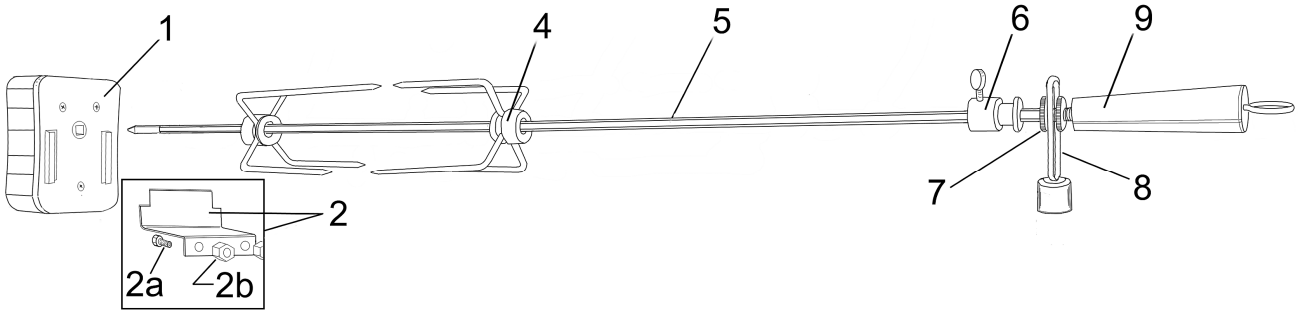

Item No	Part No	Description	Qty	Item No	Part No	Description	Qty
1	**559978**	Motor- Rotisserie, Black	**1**	**5**	**547004**	Rod- Only, Rotisserie 840mm	**1**
2	**547001**	**Brkt- Rotisserie**	**1**	**6**	**547005**	Collar- Alignment + Screw	**1**
2a	**559730**	*Screw, Pan M6 x 12 Poz	**2**	**7**	**547007**	Washer, Weight	**2**
2b	**503613**	*Nut, M6 Hex Stainless	**2**	**8**	**547006**	Weight- Balance	**1**
4	**547003**	Prong, (each)	**2**	**9**	**547008**	Handle- Rotisserie Rod	**1**