Masport®

OUTDOOR BBQ

553100	**TASMAN 6 BURNER P/C**	**Sept 2019**
553110	**TASMAN 6 BURNER P/C**	**Sept 2019**
553291	**TASMAN 6 BURNER P/C**	**July 2022**

BBQ Dimesions: Width 1550mm
Depth 606mm
Height 1172mm

Issue A.1
Aug 2022 NK
ECN # 12909
IPL Ref # 753291

TASMAN 6 Burner P/C

Masport

Issue A.1
Aug 2022 NK
ECN # 12909
IPL Ref # 753291

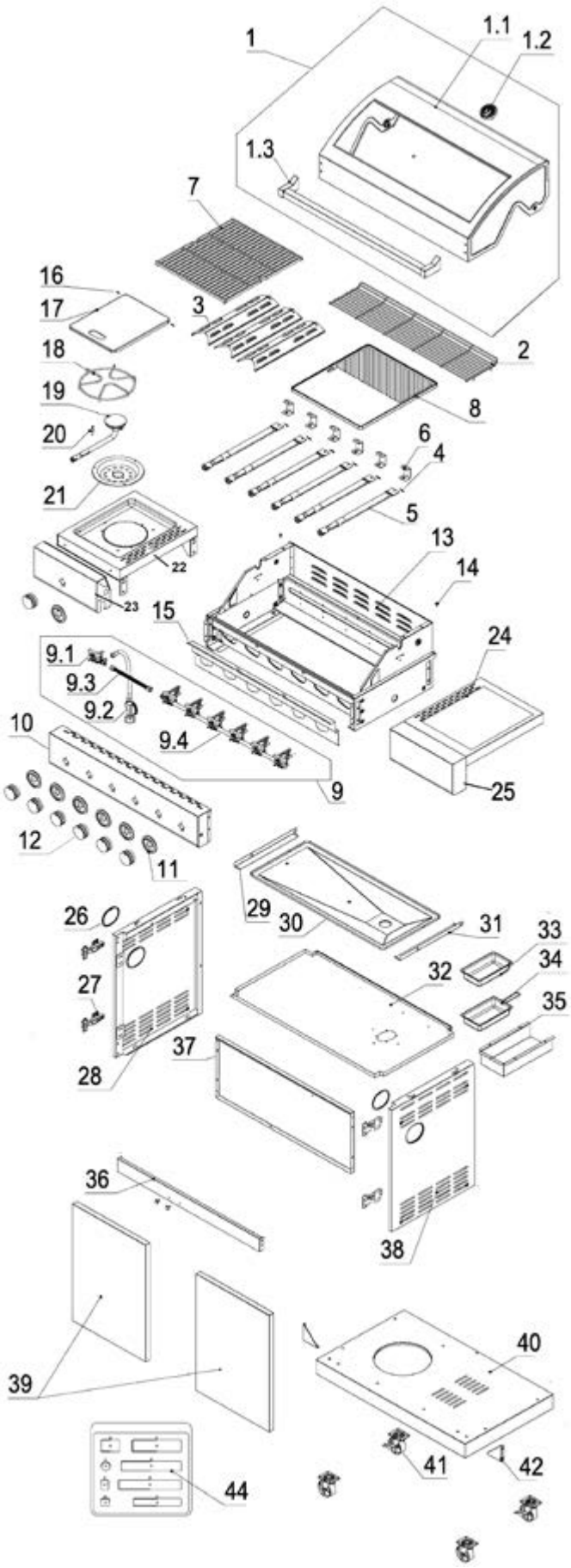

Item	Part #	Description	Qty
1	**9154646**	**Hood Assy, 6Blk/Blk**	1
1.1	9154648	*Hood	1
1.2	9153122	*Thermometer	1
1.3	9154650	*Hood Handle	1
2	9153132	Warming Rack775 x 180	1
3	9153096	Flame- Tamer, Solid100 x 390	3
5	9153127	Burner- Tube, 432mm x 0.8 202SS	6
6	9153101	Burner- Support	6
7	9153139	Grill- V/E Matt 395 x 437	1
8	9153138	Plate- V/E Matt 395 x 437	1
9	**9154652**	**Manifold- Assy 6(Int Ign) (Aus)**	1
	9154653	**Manifold- Assy 6(Int Ign) (NZ)**	1
9.1	9153075	*Valve- Side, LPG 0.90 nt/Ign	1
9.2	9154654	*Hose & Reg, POL (AUS)	1
	9154655	*Hose & Reg, QCC (N-Z)	1
	543498	*HOSE&REG, LCC27(AUS)	1
9.3	9153080	*Pipe- Flexi, Side Burner	1
9.4	9153152	*Main Gas Valve Assembly 6B	1
10	9154657	Dashboard- Lower, Tasman 6	1
11	9153124	Bezel- Control Knob	7
12	9153123	Knob- BBQ, 8.0 Chrome	7
13	9153141	Grill- Body, 6B PE	1
14	9153090	Rubber Stopper- 15dia x 3mm	6
15	9153136	Panel- Heat Shield, 6B G/Body	1
22	9154659	Table- Side, LH Side Burner Blk	1
16	9153074	*Hinge- Side Burner	2
17	9154658	*Lid- Side Burner, 255 x 325	1
18	9153078	*Trivet- Side Burner Tasman	1
19	9153077	*Burner- Side Tasman	1
20	9153072	*Electrode- Ignition, S/B	1
21	9153119	*Spill Tray	1
23	9154660	DASHBOARD,SIDE TABLE LEFT	1
24	9154661	Table- Side, RH Black	1
25	9154662	DASHBOARD,SIDE TABLE RIGHT	1
26	9153087	Ring, Plastic	2
27	9153104	Hinge- Door	4
28	9154663	Panel- Side, LH Trolley Black	1
29	9153095	Bracket- Left, Drip Tray	1
30	9153137	Tray- Drip 755 x 330	1
31	9153094	Bracket- Right, Drip Tray	1
32	9153142	Panel- Top, Trolley 6 Black	1
35	9153091	*Bracket- Grease Cup	1
33	9153102	Foil- Insert, Grease Cup	1
34	9154664	Cup- Grease Tasman	1
36	9154666	Panel- Top, Front Trolley	1
37	9154668	Panel- Rear, Trolley	1
38	9154669	Panel- Side, RH Trolley	1
39	9154671	Door- RH/LH Blk/Alcoat 6	2
40	9154673	Panel- Bottom, Trolley 6 Black	1
41	9153121	Castor- Locking	4
42	9154674	Bracket- Triangular, Door Blk	1
44	9154675	Bolt Pack, Tasman	1

Not Illustrated

546565	Owner Manual, BBQ Tasman	1

When ordering spares: PLEASE QUOTE PART NUMBER & DESCRIPTION, NOT illustrated number. Item Qty = 1 per part unless stated differently.
BOLD TEXT = Assemblies. Descriptions starting with * = items included in the assemblies & may not be available as a spares item.
Determine the left or right hand sides by standing in the operating position (standing at the handle).

DATA PLATE

Name	Model	IAPMO Approval		Injector (mm)		Pressure (kPa)	Inp/Burn (MJ/h)	Total (MJ/h)
BBQ MASP TASMAN 4	BG2294B-BL	GMK10197	ULPG:	BBQ S/B	0.95 0.9	2.75	4 x 12 1 x 11	59
BBQ MASP TASMAN 6	BG2296B-BL	GMK10197	ULPG:	BBQ S/B	0.95 0.9	2.75	6 x 12 1 x 11	83

Gas Supply Pressure, ULPG
Min: 2.70kPa; Max: 3.0kPa
Gas Type: NZ: Universal LPG
AUS: ULPG

Complies to:
Standard AS/NZS 5263.1.7

Minimum Clearance :
From Top of BBQ: 1200mm, From Sides: 600mm, From Rear : 600mm

Distributed by
MASPORT LIMITED

MASPORT LIMITED
320 Ti Rakau Drive, East Tamaki, Auckland
2013, New Zealand

MASPORT AUSTRALIA PTY LIMITED
27 Commercial Drive, Dandenong South,
Victoria 3175, Australia

Read the instructions before using the appliance

USE OUTDOOR ONLY

WARNING: Parts of this appliance may be very hot, keep young children away

IAPMO–R&T
DCEANA
GasMark

Made in P.R.C

546564.B.1

For storage and cylinder exchange, disconnect hose at the cylinder only, do not disconnect hose from the appliance.

Optional Accessories

548128	Cover- BBQ, Hooded	1
559218	Rotisserie Set, 4/6B 945mm	1