OUTDOOR BBQ

553243	Ambassador Grill Black(N-Z)	July	2022
553247	Ambassador Grill Black(Aus)	July	2022

Issue A.0
Nov 2022 NK
ECN # 12919
IPL Ref # 753243

553243 BBQ
553247 BBQ
Ambassador Grill Black

Issue A.0
Nov 2022 NK
ECN # 12919
IPL Ref # 753243

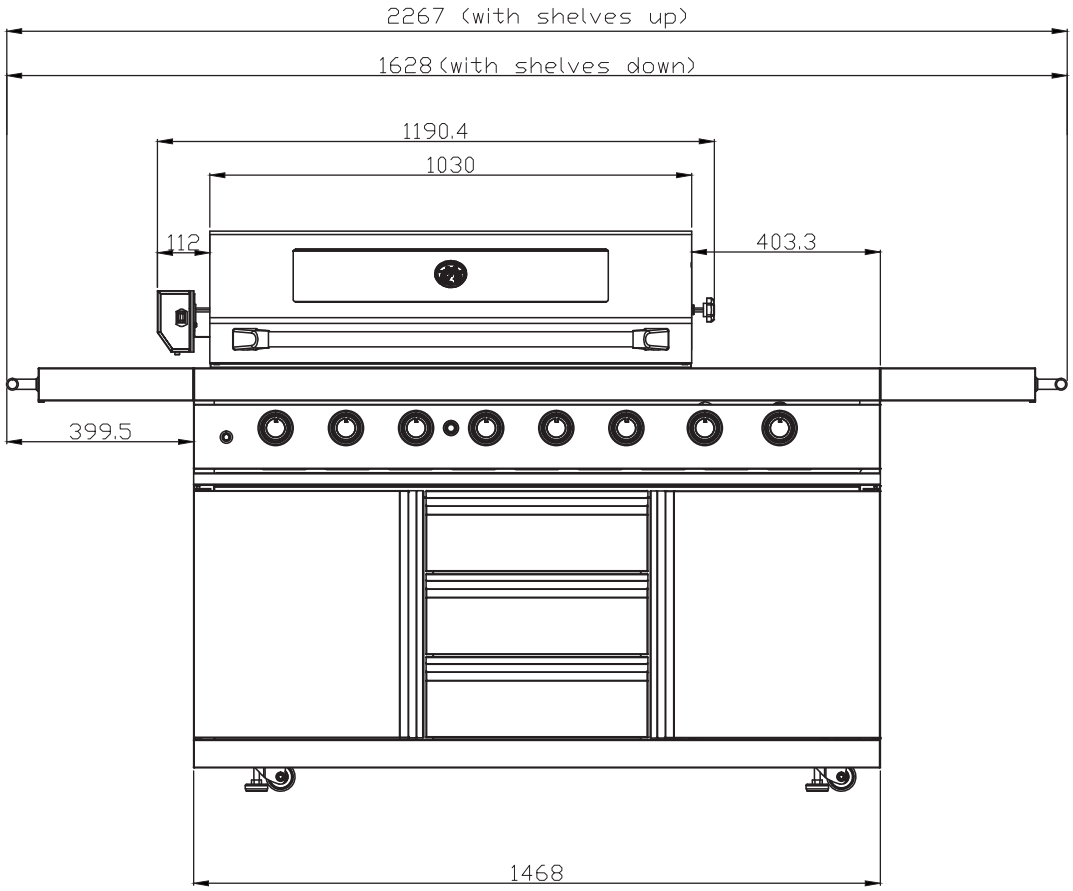

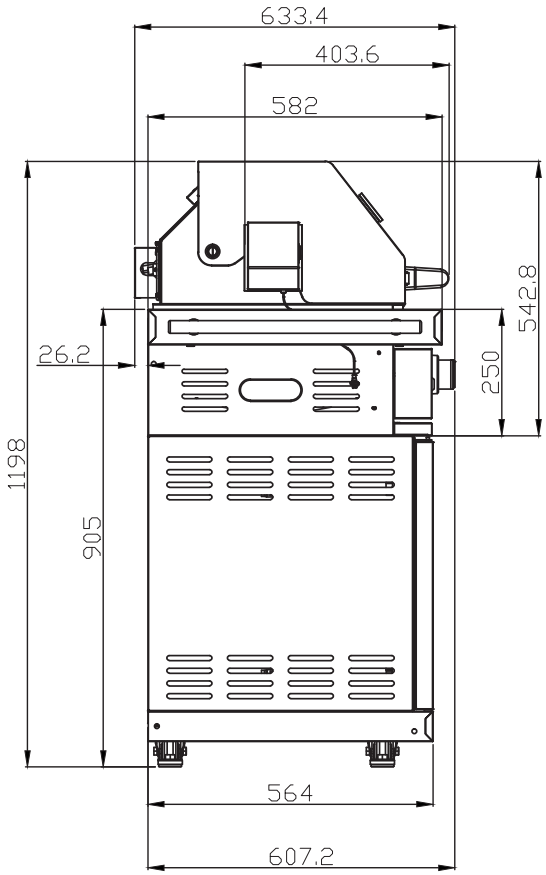

When ordering spares: PLEASE QUOTE PART NUMBER & DESCRIPTION, NOT illustrated number. Item Qty = 1 per part unless stated differently.

BOLD TEXT = Assemblies. Descriptions starting with * = items included in the assemblies & may not be available as a spares item.

553243 BBQ
553247 BBQ
Ambassador Grill Black

Masport®

Issue A.0
Nov 2022 NK
ECN # 12919
IPL Ref # 753243

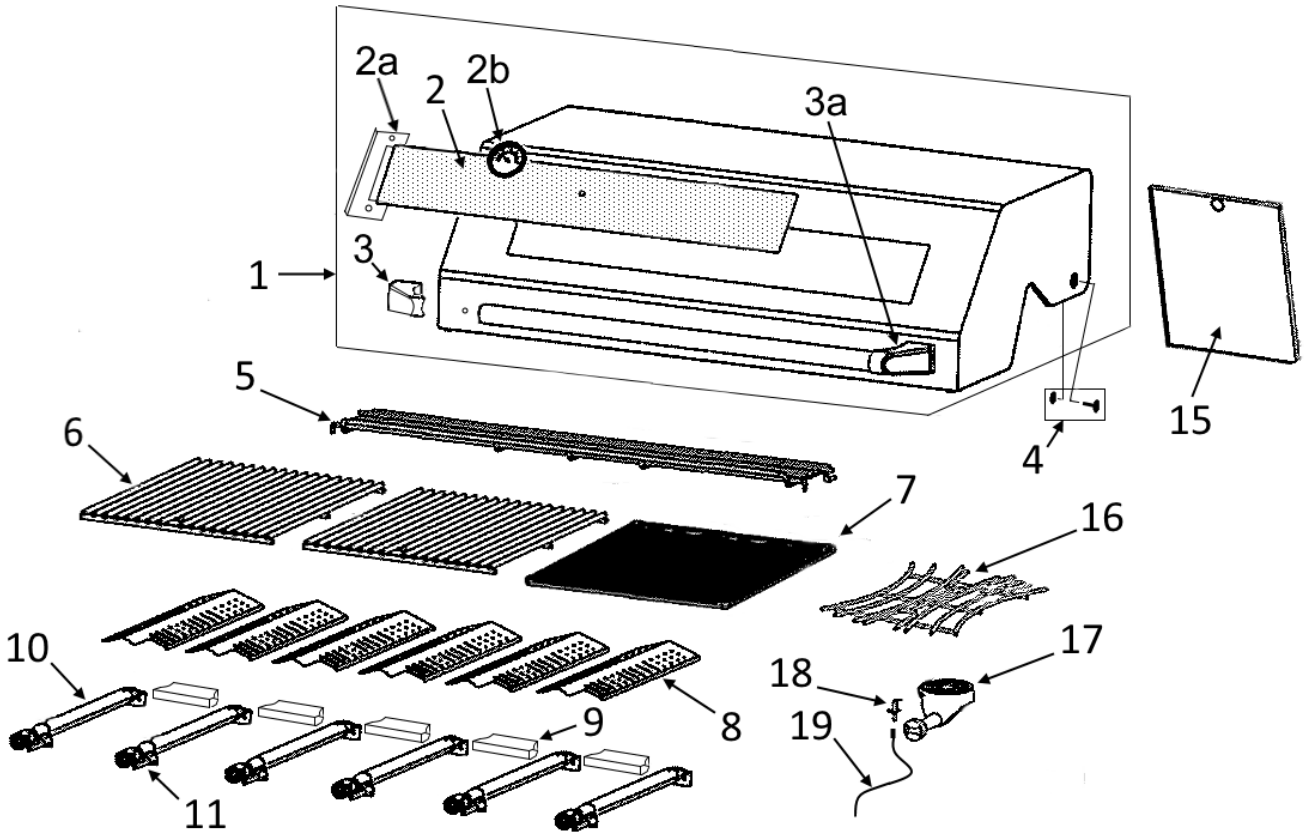

Item	Part No	Description		Qty
1	**543420**	**Hood Assembly, 1030mm**	**Black**	**1**
2	548294	*Glass- Window, Hood		1
2a	549773	*Bracket- Window, Hood		2
2b	547644	*Gauge- Temp, Dia 68mm	Red/Blk	1
3	546544	*End- L, Handle		1
3a	546900	*End- R, Handle		1
4	548221	Hood- Bolt & Nut		2
5	548293	Warming Rack, 985mm x 160mm		1
6	548219	Grill- 300 x 455	S/S	2
7	548218	Plate- P/E 350 x 455	Matt	1
8	548192	Flame- Tamer, 110 x 415 Slot	S/S	6
9	548213	Cross- Light	S/S	5
10	548208	Burner- Tube,435mm x 1.0mm	304SS	6
11	548228	Electrode, Ignition M/B	Inbuilt	6
15	548297	Lid- S/Burner	S/S	1
16	548298	Trivet- Side Burner		1
17	548301	Burner- Side		1
18	548224	Electrode- Side Burner		1
19	548299	Wire- Ignition, Side Burner 985mm		1

Not Illustrated		
549588	Cover- BBQ,	1
548966	Owner Manual	1
548201	Rubber Stopper	2
548767	Table- Side, RH/LH Folding	2
548886	*Handle- Table, Side Folding	1
548312	Rotisserie Set, 6B 1105mm (Refer to page 6)	1
547548	KIT- NG, AMB ELE/IGN	1

When ordering spares: PLEASE QUOTE PART NUMBER & DESCRIPTION, NOT illustrated number. Item Qty = 1 per part unless stated differently.

BOLD TEXT = Assemblies. Descriptions starting with * = items included in the assemblies & may not be available as a spares item.

553243 BBQ
553247 BBQ
Ambassador Grill Black

Masport®

Issue A.0
Nov 2022 NK
ECN # 12919
IPL Ref # 753243

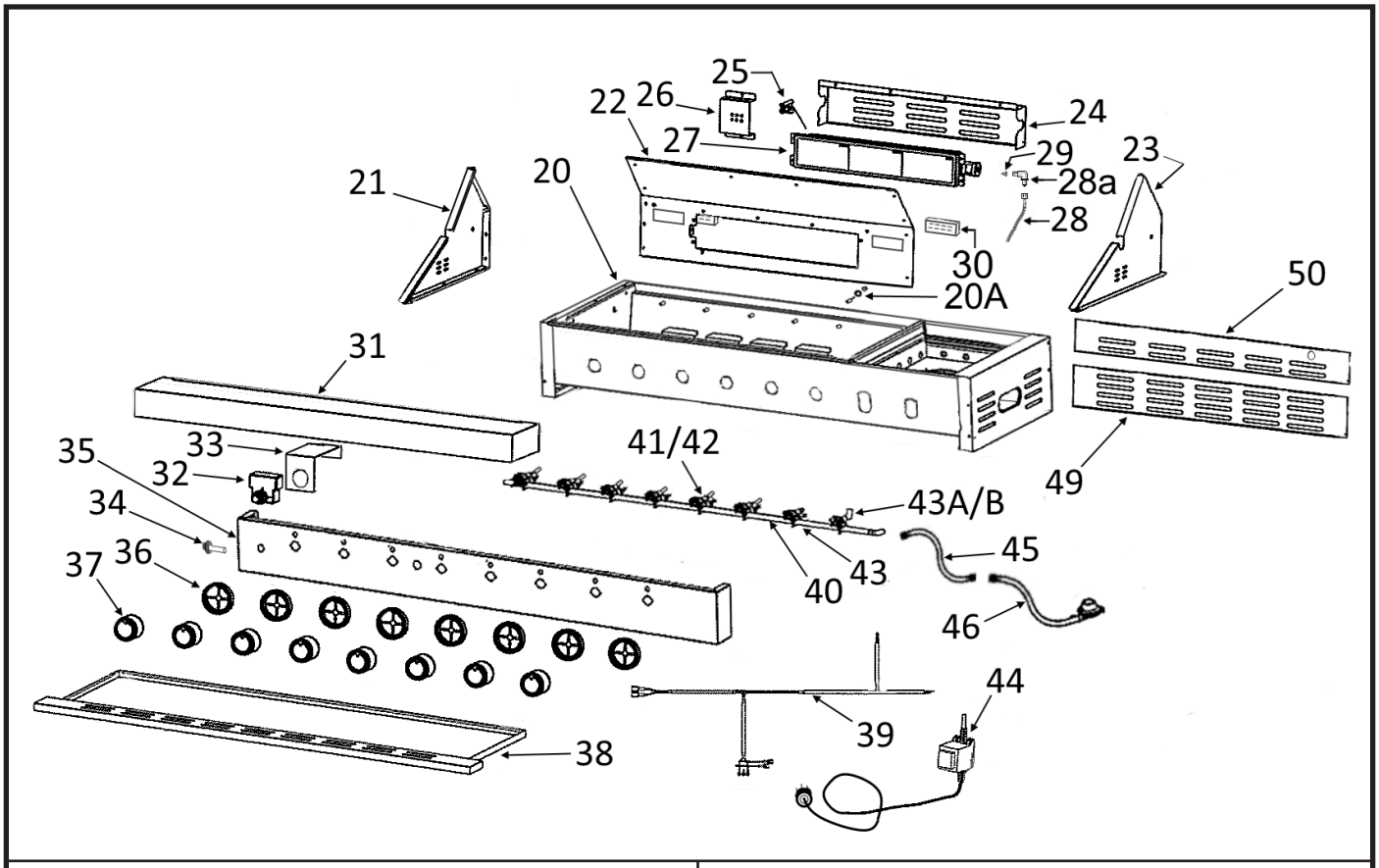

Item	Part No	Description	Qty
20	548296	Grill- Body, RB+6B SS INB	1
20a	546387	Pin, Nut & Washer- Flame Tamer	6
21	543399	Panel- Side, LH Black Hood-G/Body	1
22	543400	Panel- Rear, R/Burner Black G/Body	1
23	543401	Panel- Side, RH Black Hood-G/Body	1
24	543402	Panel- Rear Cover, R/B Black	1
25	548234	Ignitor- Rear Burner with wire	1
26	548233	Panel- Ignitor Cover R/Burner S/S	1
27	548197	Burner- Rear	1
28	548198	Pipe- Flexible, Rear Burner	1
28a	546453	Elbow 90deg Ambassador	1
29	548194	Jet, Rear 0.98mm dia LPG	1
30	**549426**	**Light- Hood, Halogen Black**	**2**
	549828	*Bulb- Hood, Halogen	1
31	548226	Panel- Front, Grill	1
32	548302	Module- Ignition, 8 Pin	1
33	548338	Heatshield- Module	1
34	548339	Switch- LED, Knobs	1
35	543403	Dashboard- Ambassador Blk	1
36	548191	Bezel/LED Control Knobs	8
37	548190	Knob- BBQ 8.1dia S/Grip Chrome	8
38	543415	Tray- Drip, 1465x345 black handle	1
39	548341	Harness- LED Lights, Knobs 8B	1
40	548300	Manifold Assy (ELE R/B) 6+RB	1
41	548196	*Valve- Main, LPG 0.98mm ELE IGN	6
42	548225	*Jet, Main 0.98mm dia LPG	6
43	548202	*Valve- Rear, LPG 0.98mm ELE IGN	1
43A	548337	*Valve- Side, LPG 0.98 ELE IGN	1

Item	Part No	Description	Qty
43B	548310	*Jet, Side 1.5mm dia LPG	6
44	549593	Transformer AC, LED Lights	1
45	548195	Pipe- Flexible, Manifold	1
46	559968	Hose & Reg, POL (Aus)	1
46	543425	Hose & Reg, LCC27(Aus)(after 2022)	1
46	546605	Hose & Reg, QCC (N-Z)	1
49	543404	Panel- Rear, Vented Lower blk	1
50	548236	Panel- Rear, Vented Top S/S	1

Not Illustrated

548199	Wire- Ignition, RB 1800mm	1
548308	Wire- Ignition, MB (Set of 6 wires)	1

When ordering spares: PLEASE QUOTE PART NUMBER & DESCRIPTION, NOT illustrated number. Item Qty = 1 per part unless stated differently.

BOLD TEXT = Assemblies. Descriptions starting with * = items included in the assemblies & may not be available as a spares item.

553243 BBQ
553247 BBQ
Ambassador Grill Black

Masport®

Issue A.0
Nov 2022 NK
ECN # 12919
IPL Ref # 753243

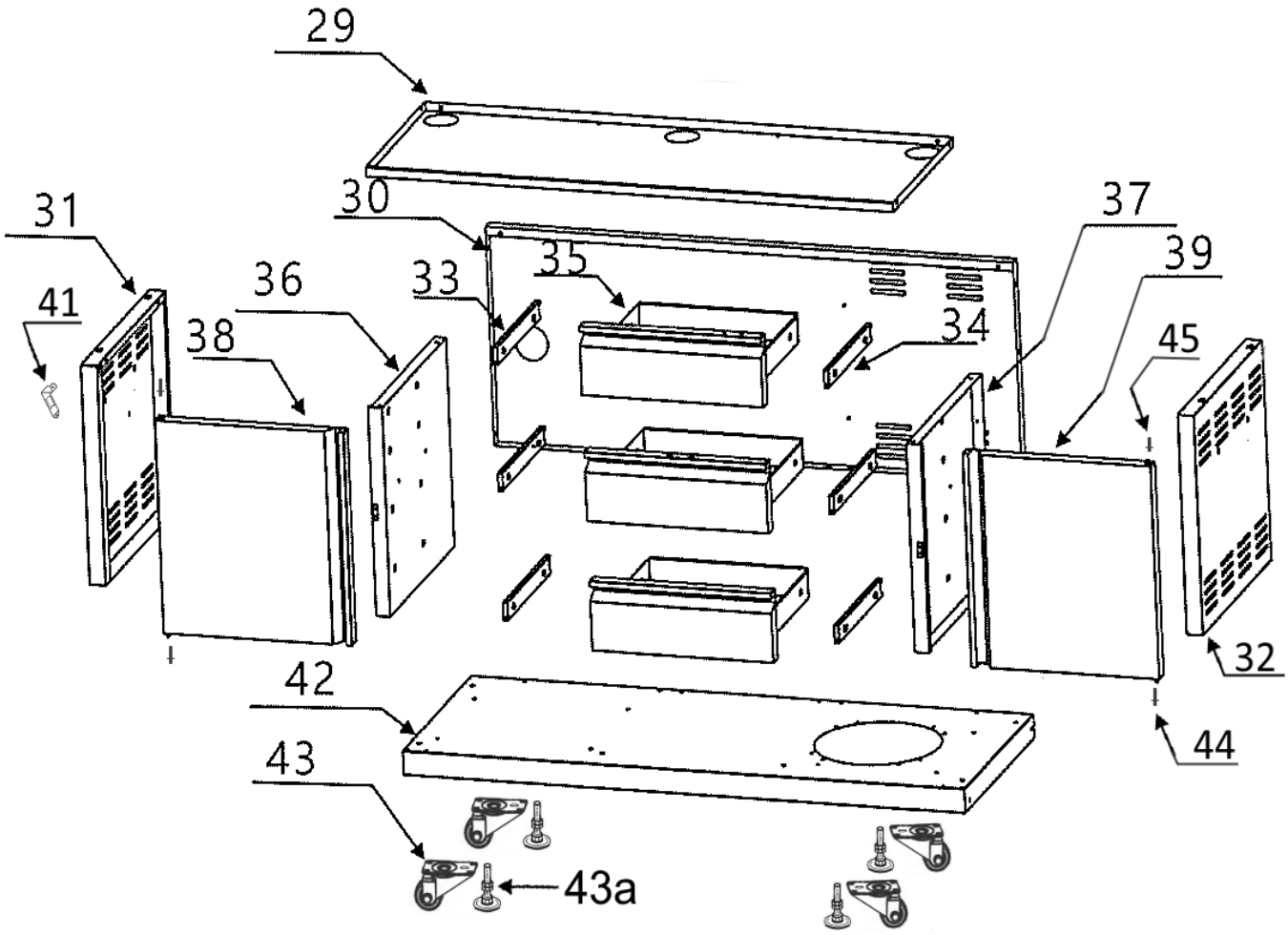

Item	Part No	Description		Qty
29	543405	Shelf- Cabinet	Blk Kitchen	1
30	543406	Panel- Rear, Trolley	Blk Kitchen	1
31	543407	Panel- Side, LH Trolley	Blk Kitchen	1
32	543408	Panel- Side, RH Trolley	Blk Kitchen	1
33	549591	Slider- Drawer, LH	Blk Kitchen	3
34	549592	Slider- Drawer, RH	Blk Kitchen	3
35	543409	Drawer- Cabinet	Blk Kitchen	3
36	543410	Panel- Side, LH Drawer	Blk Kitchen	1
37	543411	Panel- Side, RH Drawer	Blk Kitchen	1
38	543412	Door Assy, LH	Blk Kitchen	1
39	543413	Door Assy, RH	Blk Kitchen	1
41	548768	Bottle Opener		1
42	543414	Panel- Bottom, Trolley	Blk Kitchen	1

Item	Part No	Description	Qty
43	548741	Castor- Locking, Height Adj	4
43a	546307	Foot- Adjustable	4
44	548766	Hinge- Door, Bottom	2
45	548765	Hinge- Door, Top	2

When ordering spares: PLEASE QUOTE PART NUMBER & DESCRIPTION, NOT illustrated number. Item Qty = 1 per part unless stated differently.

BOLD TEXT = Assemblies. Descriptions starting with * = items included in the assemblies & may not be available as a spares item.

553243 BBQ
553247 BBQ
Ambassador Grill Black

Masport®

Issue A.0
Nov 2022 NK
ECN # 12919
IPL Ref # 753243

548312 Rotisserie Set - 6B 1105mm
(Showing the different combination of parts)

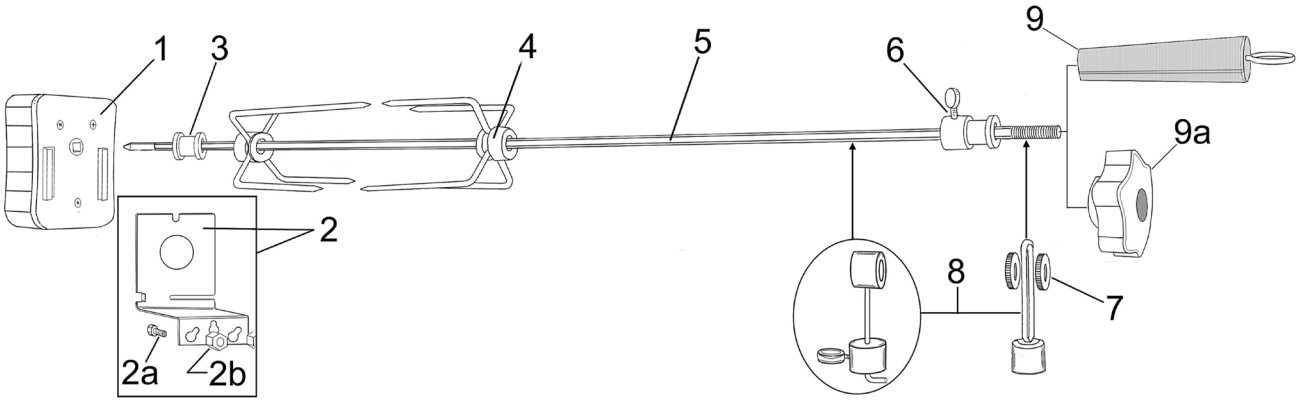

Item	Part No	Description	Qty
1	559239	Motor- Rotisserie, Black DC	1
(1	559978	Motor-Rotisserie, Black DC H/Shield	1)
(1	559977	Motor-Rotisserie, SS AC	1)
2	548238	Bracket- Rotisserie	1
2a	559730	*Screw, Pan M6 x 12 Poz	2
2b	503613	*Nut, M6 Hex Stainless	2
3	547002	Collar- Alignment	1

Item	Part No	Description	Qty
4	547003	Prong, (each)	2
5	548442	Rod- Only, Rotisserie 1105mm	1
6	547005	Collar- Alignment + Screw	1
7	547007	Washer, Weight	2
8	547006	Weight- Balance	1
9	547008	Handle- Rotisserie Rod	1
9a	546603	Handle- Rotisserie Knob	1

DATA PLATE
548965

Name	Model	AGA Approval			Injector (mm)	Pressure (kPa)	Inp/Burn (Mj/h)	Total (Mj/h)
AMBASSADOR	611U	AGA 8138 G	ULPG:	BBQ S/B R/B	0.98 0.98 0.98	2.75	6 x 13.00 1 x 12.00 1 x 12.50	102.50
			NG:	BBQ S/B R/B	1.50 1.65 1.65	1.00	6 x 11.00 1 x 12.00 1 x 13.00	91.00

Gas Supply Pressure, ULPG
Min: 2.70kPa; Max: 3.45kPA

Gas Type: NZ: Universal LPG or NG
AUS: ULPG or NG

Gas Supply Pressure, NG: 1.13KPa

Complies to:

AS/NZS 5263.1.7-2016

MANUFACTURED BY:
GUANGDONG SUNCOOK

Minimum Clearance : From Top of BBQ: 1500mm, From Sides: 1000mm, From Rear : 1000mm

Distributed by **MASPORT LIMITED**

MASPORT LIMITED
320 Ti Rakau Drive, East Tamaki, Auckland 2013, New Zealand
PO Box 14349, Panmure Auckland 1471, New Zealand

MASPORT AUSTRALIA PTY LIMITED
27 Commercial Drive, Dandenong South
Melbourne, Victoria 3175, Australia
PO Box 533, Braeside, Victoria 3195, Australia

DO NOT REMOVE
AUSTRALIA AND NEW ZEALAND GAS SAFETY CERTIFICATION

Read the instructions before using the appliance

USE OUTDOOR ONLY

WARNING: Parts of this appliance may be very hot, keep young children away

548965.C.1

For storage and cylinder exchange, disconnect hose at the cylinder only, do not disconnect hose from the appliance.

When ordering spares: PLEASE QUOTE PART NUMBER & DESCRIPTION, NOT illustrated number. Item Qty = 1 per part unless stated differently.
BOLD TEXT = Assemblies. Descriptions starting with * = items included in the assemblies & may not be available as a spares item.